NOVALOK

ADVANCING INNOVATION

SHEET 1.

ASSEMBLY INSTRUCTIONS

Z SERIES RACKING SYSTEMS

Z SERIES

Starter Unit Assembly

1. Start with end frames, make sure feet are adjusted evenly, lean one frame against a wall or hold in the vertical position with feet on the floor. **(Fig. 1)**

Fig. 1

2. Select the correct size rail/beam and clip the connector into end frame at the desired level, starting at the bottom. Note; food safety regulations require the bottom shelf to be 200mm above the floor. **(Fig. 2)**

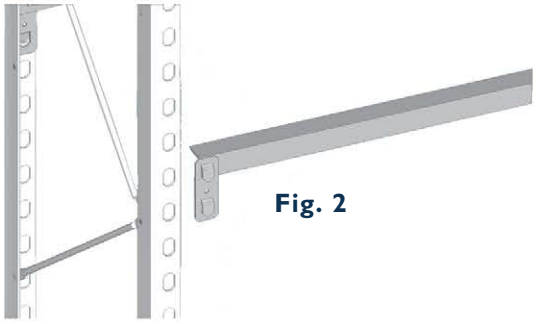

Fig. 2

3. Tap rails down firmly using a soft face hammer. Note: Hammer only on the front edge of rail. Failure to do this will result in bending the clip. **(Fig. 3)**

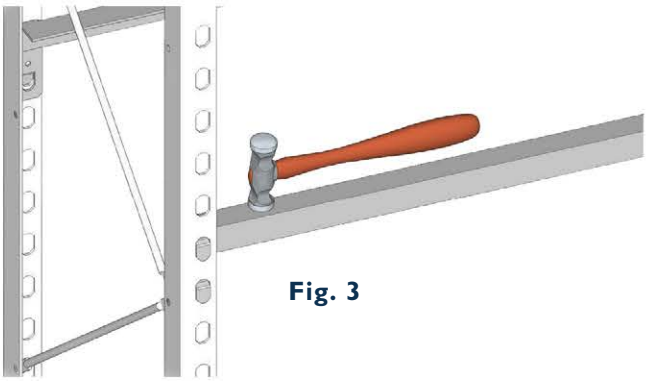

Fig. 3

4. Stand the second matching end frame in position and clip rail connector into the rear post in the identical matching position as the other frame. The two frames will now stand self-supported. **(Fig. 4)**

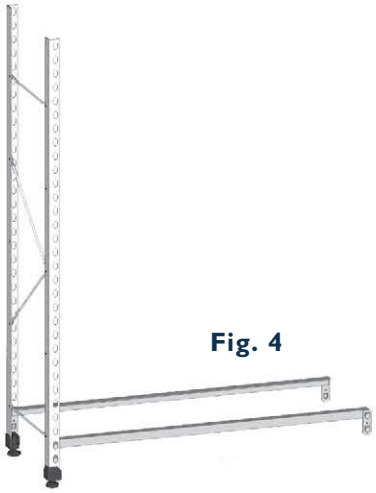

Fig. 4

Z SERIES

Starter Unit Assembly

5. Continue fitting rails, working up from the bottom. NOTE: it is important to always work up from the bottom. **(Fig. 5a-5c)**

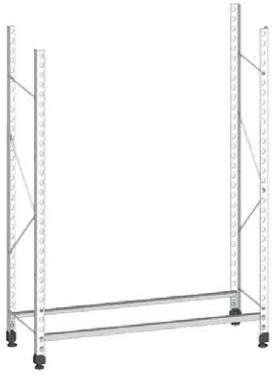

Fig. 5a

Fig. 5b

Fig. 5c

6. Once all the rails are fitted then place the shelf panels on the rails, whether it be Novex panels, wire racks or metal panel shelves. **(Fig 6)**

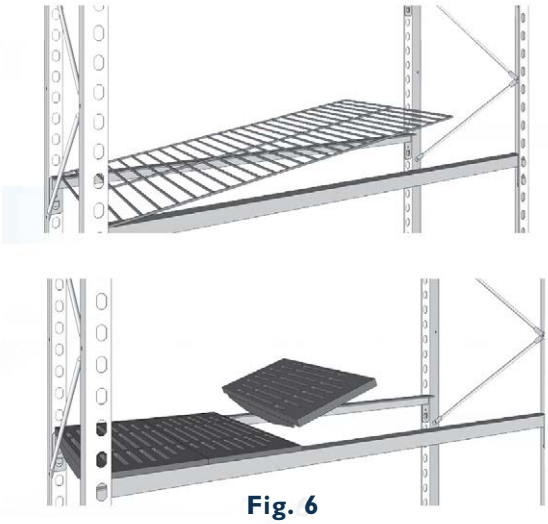

Fig. 6

7. Once assembly is completed position the module in it desired location, check it is plumb, adjust feet if necessary to level the unit. If needed final levelling through adjustable feet can be done in this step as in Step 1.

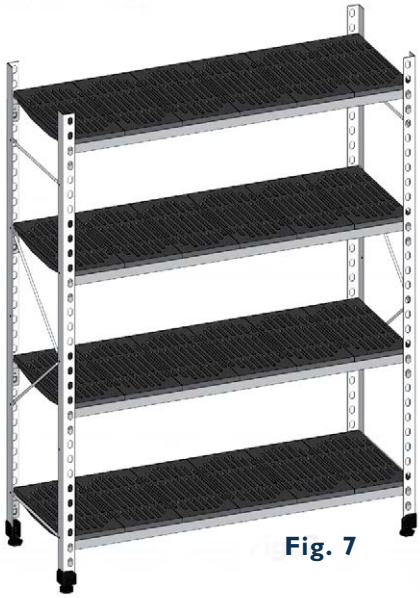

Fig. 7